YT-9888-C1 Lens Specification

1.SENSOR SIZE		IMX317(3840*2160)
2.WAVELENGTH	=	420-700nm
3.FOCAL LENGTH (EFL)	=	3.8mm
4.F/NO (INFINITE)	=	2.8
5.BACK FOCAL LENGTH	=	5.59
6.FLANGE BACK LENGTH	=	2.49
7.FIELD OF VIEW(D)	=	90°
FIELD OF VIEW(H)	=	82°
FIELD OF VIEW(V)	=	50°
8.OPTICAL DISTORTION	<	-2%
9.THREAD SIZE	=	M12XP0.5
10.STRUCTURE	=	8G+IR(BLUE GLASS)

11.IR FILTER SPEC.(Built-in,Others available)

Tavg>=90% @ 420-600 nm

T=50% @ 650±10 nm

Tavg<=3% @ 700-1100 nm

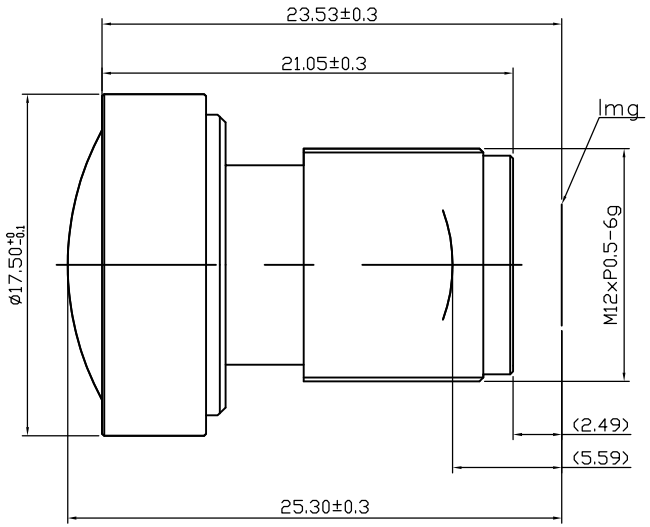

REV	DESCRIPTION	DATE	NAME
①			
②			
③			
④			

NAME	YT-9888-C1		SCALE		DRAWN	黄光深
VIEW	REV	00	DATE	2024.03.16	CHECKED	
Wintop Optics			BORDER		APPROVED	